AVANT 200 SERIES

Parts List

STARTING FROM SERIAL NO.:30001-30026;43509…

AVANT 216 A2978

Manufacturer:

AVANT TECNO OY
YLÖTIE 1
33470 YLÖJÄRVI, FINLAND
Tel. +358 3 347 8800
Fax +358 3 348 5511
www.avanttecno.com

Contents

AVANT 216	A2978	4,5
AVANT 216 ASSEMBLY	A1355	6,7,8
ENGINE, ASSEMBLY	A21130	9,10
BOOM, ASSEMBLY	A21133	10,11
PARKING BRAKE	A33076	12
SAFETY FRAME	A33157	13
ELECTRIC SYSTEM	A46415	14
DRIVE MOTORS, FRONT WHEELS	A46243	15
DRIVE MOTORS, REAR WHEELS	A46244	15
FUEL TANK, ASSEMBLY	A46411	16
SEAT, ASSEMBLY	A46502	17
DAMPER ELEMENT	A46549	17
DRIVE PEDAL, ASSEMBLY	A33078	18
HYDRAULIC HOSES, DRIVE CIRCUIT	A33077	19
HYDR. HOSES, open circuit/cooler	A21132	20,21

AVANT 216 A2978

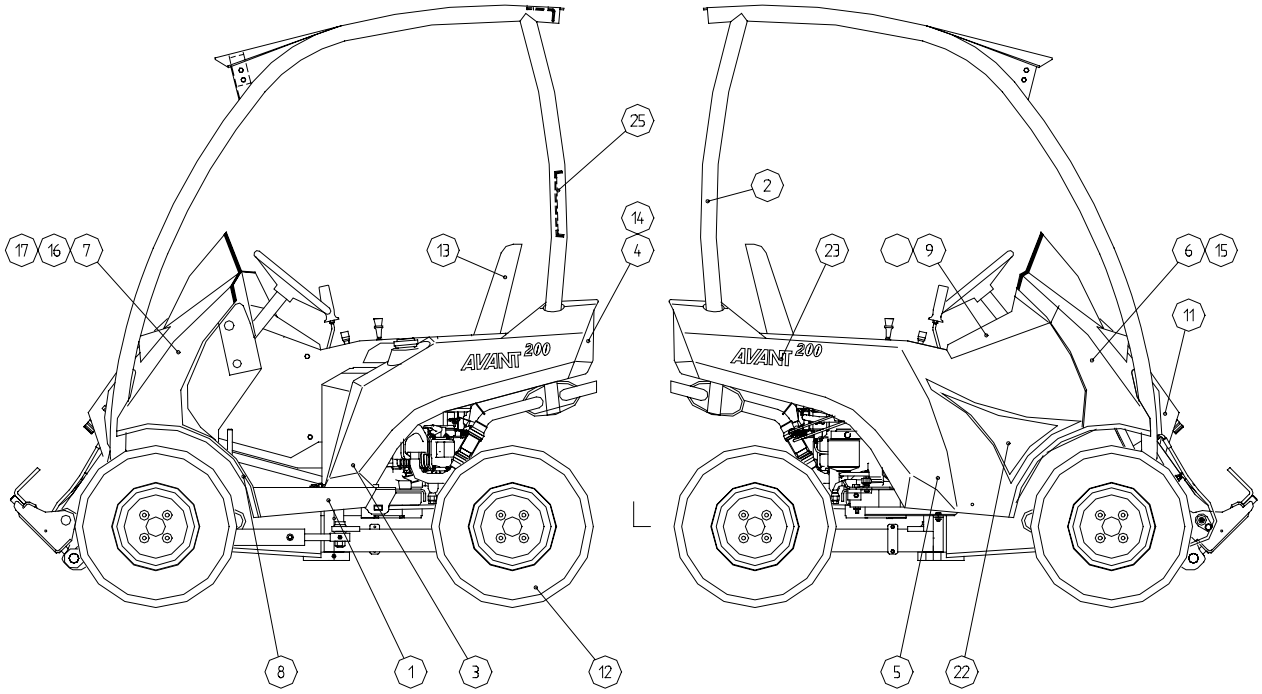

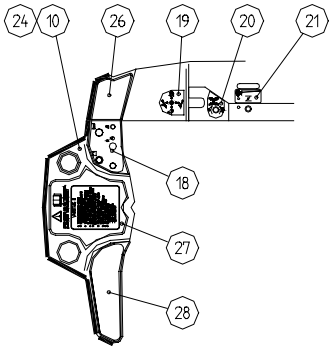

AVANT 216 A2978

Pos.	Part no.	Pcs	Description
1	A1355	1	AVANT 216, ASSEMBLY
2	A33157	1	SAFETY FRAME
3	A46436	1	COVER PLATE, SIDE, LEFT
4	A46438	1	SPOILER
5	A46437	1	COVER PLATE, SIDE, RIGHT
6	A46440	1	COVER PLATE, FRONT, RIGHT
7	A46439	1	COVER PLATE, FRONT, LEFT
8	A46442	1	MUDGUARD, FRONT
	A46469	2	MUDGUARD, REAR
9	A46444	1	COVER, HYDRAULIC OIL TANK
10	A46441	1	DASHBOARD
11	A46443	1	COVER PLATE, HOSES
12	64164	4	WHEEL, GRASS PROFILE 20*8.00-10/4PR T539
	64794	4	WHEEL, TRACTOR PROFILE 21*8.00-10/4PR T462
13	A46502	1	SEAT, ASSEMBLY
14	A46445	2	FASTENING CLAMP, CORNER, SHARP
15	A46446	2	FASTENING CLAMP, CORNER, GENTLY SLOPING
16	A46452	1	FASTENING CLAMP, COVER PLATE, SHORT
17	A46453	1	FASTENING CLAMP, COVER PLATE, LONG
18	A46460	1	DECAL, IGNITION SWITCH
19	A46457	1	DECAL, LOADER CONTROL
20	A46458	1	DECAL, DRIVE RELEASE
21	A46459	1	DECAL, THROTTLE/CHOKE
22	A46462	1	DECAL, RIGHT SIDE
23	A46461	2	DECAL, AVANT 216
24	A46456	3	FASTENING CLAMP, CORNER/DASHBOARD
25	A44007	1	DECAL AVANT 60*225
26	A46465	1	DECAL, DASHBOARD, RIGHT
27	A46466	1	DECAL, DASHBOARD/SUOMI
28	A46464	1	DECAL, DASHBOARD, LEFT

AVANT 216 ASSEMBLY A1355

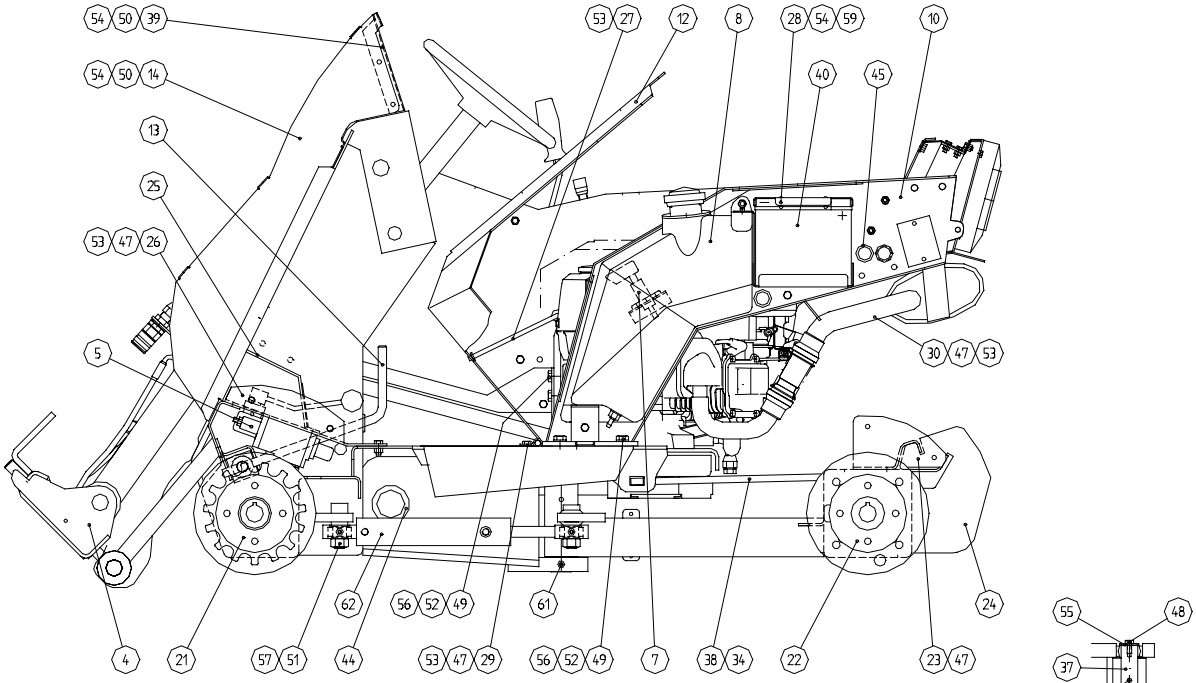

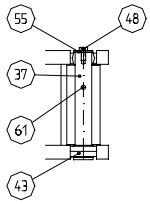

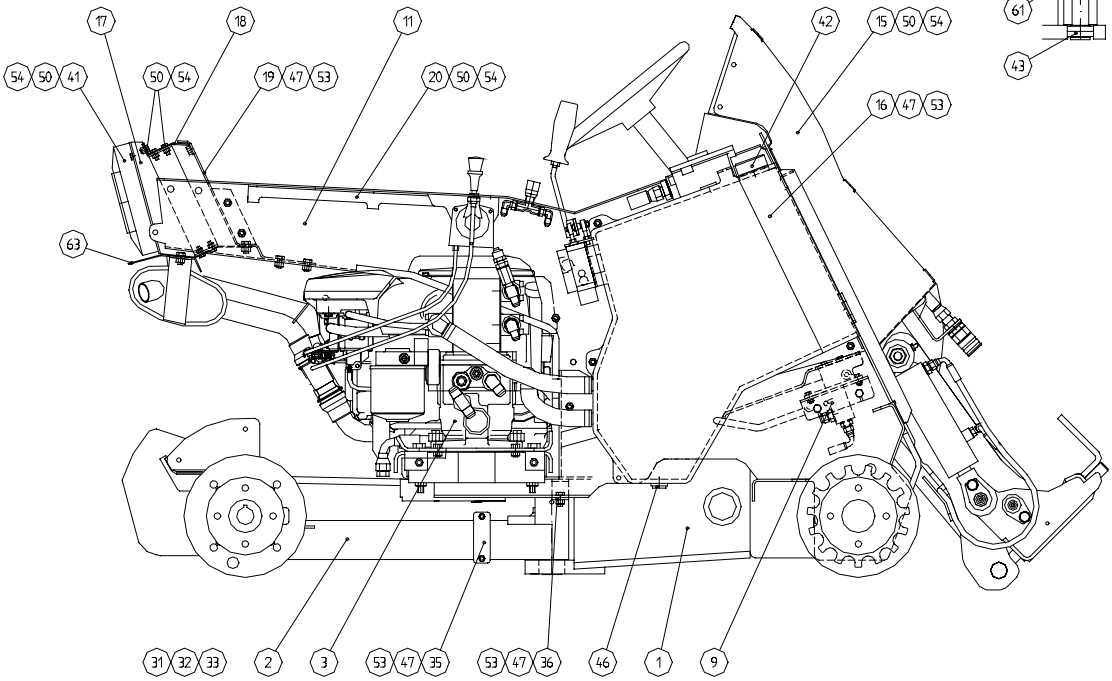

AVANT 216 ASSEMBLY A1355

1	A21058	1	CHASSIS, ASSEMBLY
2	A32886	1	CHASSIS, REAR, ASSEMBLY
3	A21130	1	ENGINE, ASSEMBLY
4	A21133	1	BOOM, ASSEMBLY
5	A21132	1	HYDR. HOSES OPEN CIRCUIT/COOLER CELL
6	A33077	1	HYDRAULIC HOSES, DRIVE
7	A46415	1	ELECTRIC SYSTEM, ASSEMBLY
8	A46411	1	FUEL TANK, ASSEMBLY 9L
9	A33078	1	DRIVE PEDAL, ASSEMBLY
10	A45663	1	BRACKET, LEFT
11	A45115	1	SIDE PLATE
12	A46016	1	SEAT BASE
13	A33076	1	PARKING BRAKE
14	A46422	1	SIDE, LEFT
15	A46423	1	SIDE, RIGHT
16	A45107	1	HYDRAULIC OIL TANK
17	A45772	1	OIL COOLER HOUSING
18	A46425	1	PLATE, UPPER
19	A46420	1	BEAM, REAR
20	A46118	1	BRACKET, EDGE
21	A46243	2	DRIVE MOTOR, FRONT, ASSEMBLY
22	A46244	2	DRIVE MOTOR, REAR, ASSEMBLY
23	A45807	1	BRACKET, REAR WEIGHT
24	A45804	6	REAR WEIGHT 9.7KG
25	A45824	1	COVER
26	A45823	1	BRACKET, CONTROL VALVE, AUX. HYDR.
27	A46401	1	SERVICE SUPPORT, LIFT CYLINDER
28	A46418	1	BRACKET, BATTERY
29	A46130	2	HINGE
30	A46416	1	EXHAUST MUFFLER
31	A46494	1	DRAIN LINE HOSES, FRONT
32	A46495	1	DRAIN LINE HOSES, REAR
33	A46496	1	DRAIN HOSE
34	71727	1	RING SPLINT 9,5 MM ZN
35	A45858	1	BRACKET, HOSES, LOWER
36	A45857	1	HOSE CLAMP
37	A45787	1	PIVOT PIN
38	A46301	1	FRAME LOCKING BAR
39	A46454	1	COVER
40	64775	1	BATTERY YUASA YB16L-B 12V19AH
41	64778	1	FAN SPAL VA14-AP11/C-34A
43	64273	2	ARTICULATION BEARING GE30ES
44	64777	2	GROMMET F68/60/50,S=4H=12
45	64776	3	GROMMET F32/28/24,S=4,H=8
46	64174	1	HEXAGONAL PLUG R 1/2"
47	72130	22	HEXAGONAL SCREW ZN M 8* 20 DIN 933
48	73040	1	HEXAGONAL SCREW ZN M10* 20 DIN 933
49	72151	4	HEXAGONAL SCREW ZN M10* 30 DIN 933
50	72117	21	HEXAGONAL SCREW ZN M 6* 16 DIN 933

51	72330	2	HEXAGONAL NUT M16 DIN 985 ZNNYLOC
52	72322	4	HEXAGONAL NUT M10 DIN 985 ZN
53	72320	20	HEXAGONAL NUT ZN M8 DIN 985 NYLOC
54	72318	16	HEXAGONAL NUT M6 DIN 985 ZNNYLOC
55	73018	1	WASHER M10 R11 DIN 440 ZN KORI
56	73612	4	WASHER M10 A10 DIN 127 ZN JOUSI
57	73461	2	WASHER M16 18 DIN 126 ZN
58	73122		WASHER M 8 A8,4 DIN 125 ZN
59	71682	2	WASHER M 6 A6,4 DIN 6798 ZN *
60	71776	1	SPRING SPLINT 8* 50 DIN 1481
61	72798	1	GREASE NIPPLE DIN 71412 R1/8" STRAIGHT
62	A44998	1	ARTICULATION CYLINDER F40/F20*150
63	A46551	1	PLATE, HEAT PROTECTION

ENGINE, ASSEMBLY A21130

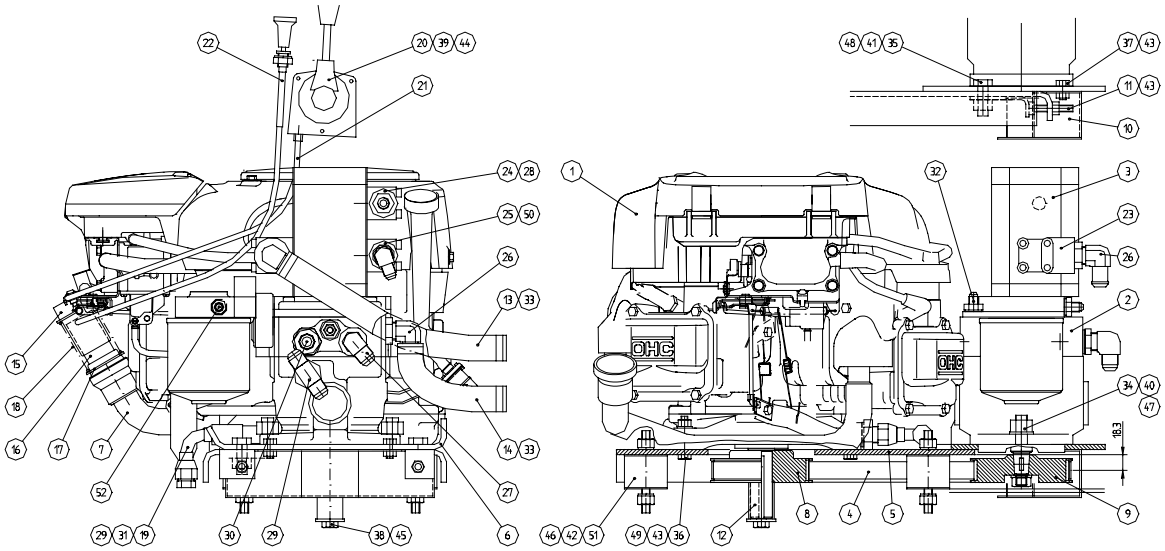

1	64781	1	ENGINE HONDA GXV530 DXA
2	64773	1	VARIABLE DISPL. PUMP NT12PV14-14 HI2
3	64779	1	HYDR. GEAR PUMP PLP20.6,3D0-03S1-LBE
4	64772	1	COGGED BELT GT2 960-8MGT-20
5	A45660	1	BOTTOM PLATE
6	A45009	1	FLANGE, PUMP
7	A32962	1	EXHAUST MANIFOLD HONDA GCV 530
8	A45562	1	SPROCKET Z=44
9	A45561	1	SPROCKET Z=44
10	A46467	1	COVER PLATE, BELT
11	A46148	2	RETAINING DEVICE, BELT
12	A46407	1	BUSHING
13	A46406	1	SUCTION HOSE L=290
14	A46405	1	SUCTION HOSE L=200
15	A46004	1	EXHAUST PIPE, OUTER

16	A46003	1	EXHAUST PIPE, INNER
17	A46002	2	RING
18	A46005	1	SPRING 3*41*140 nt 8,5
19	A46402	1	HYDRAULIC HOSE L=215
20	73762	1	CONTROL DEVICE F7110 (HAND THROTTLE)
21	A46408	1	THROTTLE WIRE
22	64782	1	CHOKE WIRE 17950-HN5671 HONDA
23	64767	1	PRESSURE FLANGE 2GB12 (R1/2"-F40 AL)
24	73747	1	PRESSURE FLANGE 1GQ38 (R3/8"-F30 AL)
25	64193	1	PRESSURE FLANGE 1GB38 (R3/8"-F35 AL)
26	A46403	2	SUCTION NIPPLE
27	64045	1	ELBOW FITTING 90° C40XS12-1/2
28	64041	1	BASIC FITTING F40XS10-3/8
29	64768	1	PIPE FITTING PNTXS12
30	64058	2	BASIC FITTING F40XS12-1/2
31	A46455	1	OIL DRAIN PLUG
32	A46404	2	REDUCER FITTING R1/8"-UNF 7/16"
33	73530	4	HOSE CLAMP ABA 22-32 MM ZN
34	72184	2	HEXAGONAL SCREW ZN M14* 40 DIN 933
35	73042	2	HEXAGONAL SCREW ZN M12* 35 DIN 933
36	72137	4	HEXAGONAL SCREW ZN M 8* 50 DIN 931
37	73039	2	HEXAGONAL SCREW ZN M 8* 16 DIN 933
38	74706	1	HEXAGONAL SCREW ZN UNF 7/16"- 3/4"
39	74582	3	COUNTERS.CROSS-SLOTH SCREW M4*25DIN965
40	72327	2	HEXAGONAL NUT M14 DIN 985 ZNNYLOC
41	72324	2	HEXAGONAL NUT M12 DIN 985 ZNNYLOC
42	72323	8	HEXAGONAL NUT M12 DIN 934 ZN
43	72320	8	HEXAGONAL NUT ZN M8 DIN 985 NYLOC
44	72313	3	HEXAGONAL NUT M4 DIN 985 ZNNYLOC
45	73018	1	WASHER M10 R11 DIN 440 ZN KORI
46	73612	8	WASHER M10 A10 DIN 127 ZN JOUSI
47	73384	2	WASHER M14 A15 DIN 125 ZN
48	71691	2	WASHER M12 A13 DIN 125 ZN
49	73122	4	WASHER M 8 A8,4 DIN 125 ZN
50	64068	1	ELBOW FITTING 90°. C40XS12-3/8
51	64774	4	ENGINE MOUNT, CYLIND. SHAPE, 1021 550
52	64678	1	BASIC FITTING F40XS6-1/4"
53	A46518	1	KEY 6.3*6.3*20
	64805	1	ENGINE OIL FILTER
	64806	1	FUEL FILTER
	64804	1	AIR FILTER, OUTER
	64803	1	AIR FILTER
	64807	1	PRESSURE FILTER, HYDRAULICS
	64219	2	SPARK PLUG

BOOM, ASSEMBLY A21133

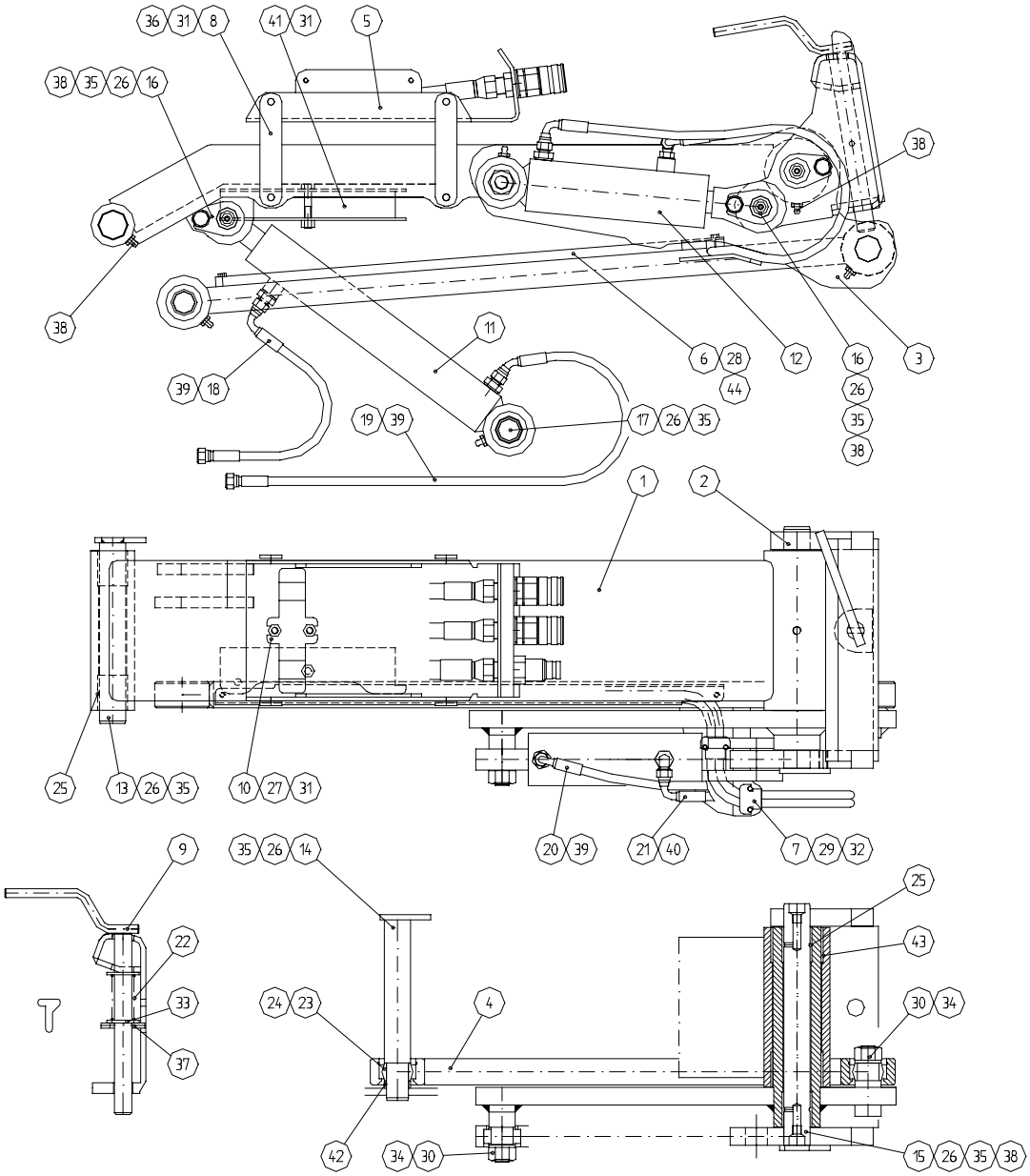

1	A32878	1	BOOM
2	A32879	1	ATTACHMENT COUPLING PLATE
3	A45767	1	BRACKET, TILT CYL./SELF LEVELLING SYST
4	A45990	1	LEVELLING BAR
5	A46450	1	SUPPORT PLATE, HOSES
6	A45768	1	COVER, HOSES
7	A45937	2	HOSE CLAMP
8	A46400	4	LEVER, HOSE SUPPORT PLATE
9	A45991	1	LOCKING PIN
10	A45808	1	HOSE CLAMP
11	A44996	1	HYDR. CYLINDER F50/25*200, LIFT

12	A44997	1	HYDR. CYLINDER F50/F25*75, TILT
13	A46397	1	PIVOT PIN, BOOM
14	A46396	1	PIVOT PIN, SELF LEVELLING
15	A46394	1	PIVOT PIN, TILT
16	A46399	2	PIVOT PIN, TILT CYLINDER
17	A46398	1	PIVOT PIN, LIFT CYLINDER
18	A46253	1	HYDRAULIC HOSE L=1320 TYPE 087-3/16"
19	A46254	1	HYDRAULIC HOSE L=1110 TYPE 087-3/16"
20	A46256	1	HYDRAULIC HOSE L=2730 TYPE 087-3/16"
21	A46255	1	HYDRAULIC HOSE L=2580 TYPE 087-3/16"
22	64138	1	COMPRESSION SPRING, DIN2098 2*25*135
23	64769	2	ARTICULAT BEARING GE25ES F42/25-20(16)
24	74705	2	SEEGER RING J 42*1,75 DIN 472
25	64586	4	SLIDE BEARING BRM-80 TFP-3040
26	72147	6	HEXAGONAL SCREW ZN M10* 16 DIN 933
27	72130	2	HEXAGONAL SCREW ZN M 8* 20 DIN 933
28	72118	2	HEXAGONAL SCREW ZN M 6* 20 DIN 933
29	72119	4	HEXAGONAL SCREW ZN M 6* 25 DIN 933
30	72330	2	HEXAGONAL NUT M16 DIN 985 ZNNYLOC
31	72320	11	HEXAGONAL NUT ZN M8 DIN 985 NYLOC
32	72318	4	HEXAGONAL NUT M6 DIN 985 ZNNYLOC
33	73123	2	WASHER M20 A21 DIN 125 ZN
34	73461	2	WASHER M16 18 DIN 126 ZN
35	74531	6	WASHER, PAIR M10 NL10 NORDLOCK
36	73122	8	WASHER M 8 A8,4 DIN 125 ZN
37	71793	1	SPRING SPLINT 6* 40 DIN 1481
38	72798	5	GREASE NIPPLE DIN 71412 R1/8" STRAIGHT
39	64678	3	BASIC FITTING F40XS6-1/4"
40	64687	1	ELBOW FITTING 90° C40XS6-1/4"
41	A46417	1	SERVICE SUPPORT, LIFT CYLINDER
42	A46472	1	BUSHING
43	64788	2	SLIDE BEARING BRM-80 TFP-5540
44	A46537	2	SUPPORT BUSHING

PARKING BRAKE A33076

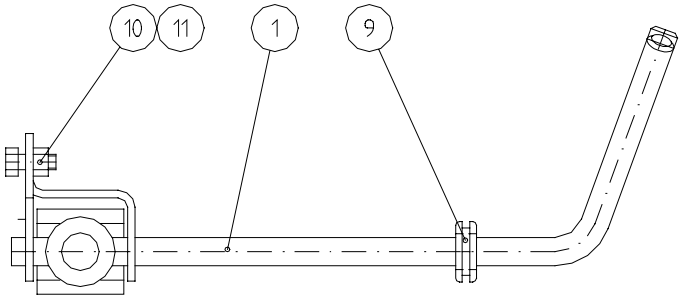

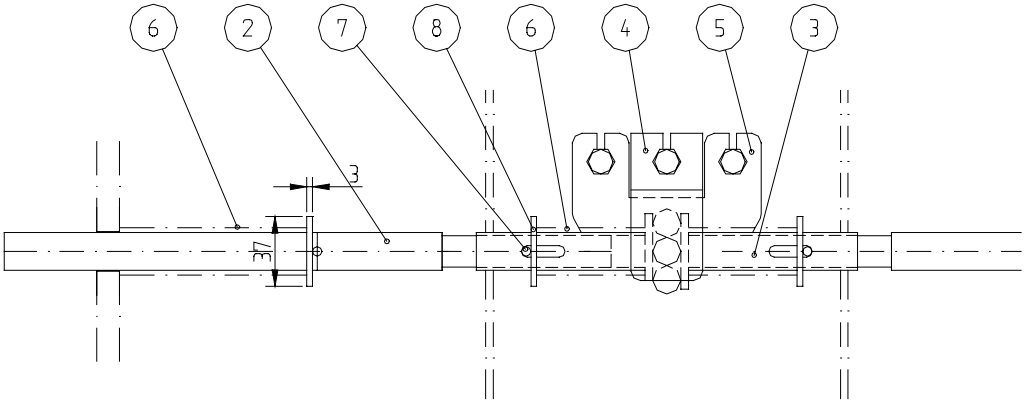

1	A45670	1	TORSION BAR
2	A45667	2	LOCKING PIN
3	A45666	2	BUSHING
4	A45669	1	STOPPER
5	A45668	1	BOTTOM PLATE
6			
7	71792	4	SPRING SPLINT 5* 32 DIN 1481 KELTA
8	73123	4	WASHER M20 A21 DIN 125 ZN
9	64786	1	GROMMET F32/25/19,S=4H=11
10	72130	3	HEXAGONAL SCREW ZN M 8* 20 DIN 933
11	72320	3	HEXAGONAL NUT ZN M8 DIN 985 NYLOC

SAFETY FRAME A33157

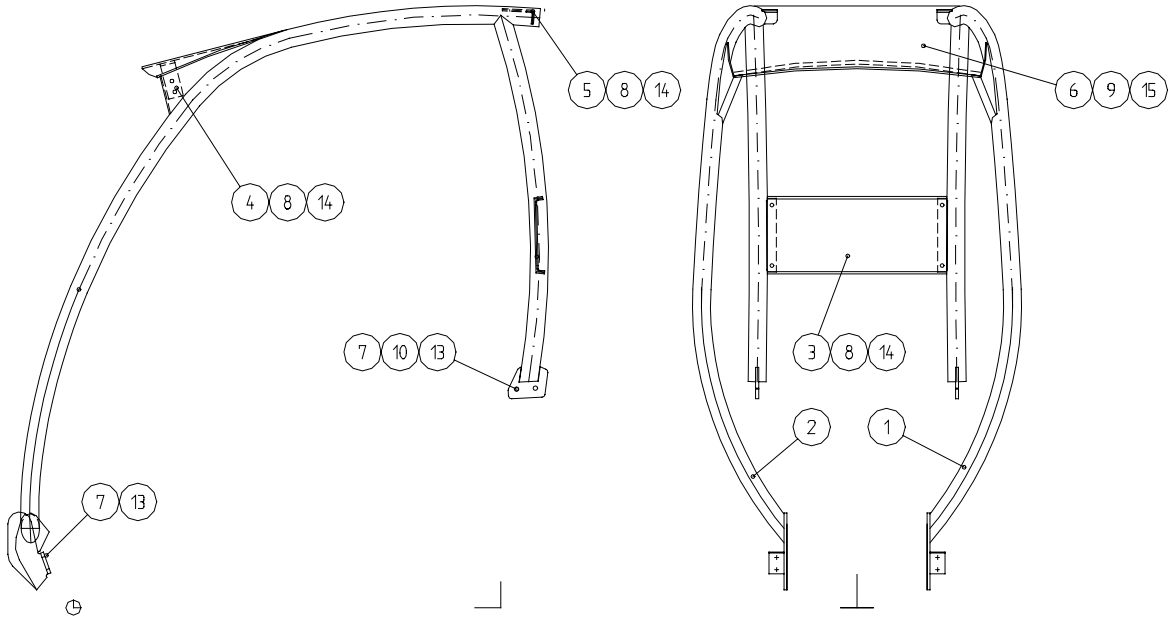

1	A33155	1	SAFETY FRAME, LEFT
2	A33156	1	SAFETY FRAME, RIGHT
3	A45952	1	BACK PLATE
4	A46300	1	ROOF FRAME
5	A45797	1	CROSS BEAM, REAR
6	A46297	1	ROOF PLATE
7	72151	8	HEXAGONAL SCREW ZN M10* 30 DIN 933
8	72130	12	HEXAGONAL SCREW ZN M 8* 20 DIN 933
9	72118	8	HEXAGONAL SCREW ZN M 6* 20 DIN 933
10	72322	4	HEXAGONAL NUT M10 DIN 985 ZN
11	72320	12	HEXAGONAL NUT ZN M8 DIN 985 NYLOC
12	72318	8	HEXAGONAL NUT M6 DIN 985 ZNNYLOC
13	74423	8	WASHER M10 11 DIN 126
14	74525	12	WASHER M 8 8,4*20*1,25 ZN
15	74523	8	WASHER M 6 6,5*20*1,25 ZN

ELECTRIC WIRING A46415

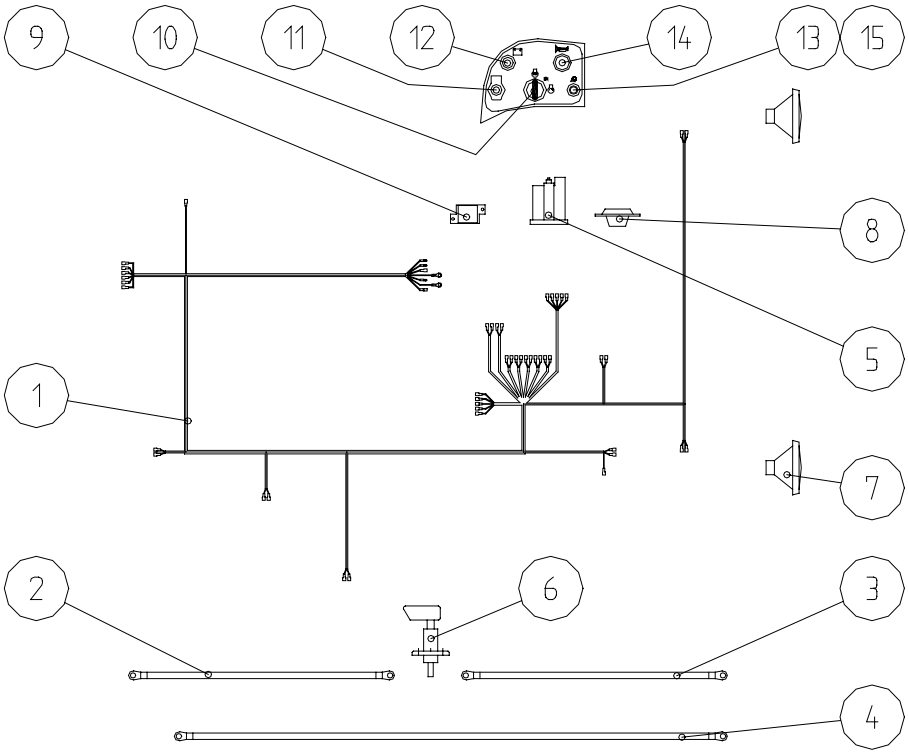

1	A21131	1	WIRE HARNESS AVANT 200
2	A46412	1	CABLE, BATTERY DISCONN SWITCH/EARTH
3	A46413	1	CABLE, BATTERY DISCONN SWITCH/BATTERY
4	A46414	1	CABLE, BATTERY/STARTER
5	64152	1	HOUR METER, COBO D.52 10-80V
6	64141	1	BATTERY DISCONNECT SWITCH MBERS-98700
7	64785	2	WORK LIGHT COBO 05-0697-0000
8	64157	1	SIGNAL HORN 12 V DC
9	64292	1	FUSE BOX, FOR 2 FUSES, MERIT
10	64784	1	IGNITION SWITCH COBO 14.111.000
11	64213	1	OUTLET 12V MERIT 114320
12	64103	1	INDICATOR LIGHT 12V C057900 GREEN
13	64602	1	TOGGLE SWITCH B067AP 250VAC/10A 1-N
14	64074	1	PRESS SWITCH, F22,5 MERIT 201700
15	64603	1	RUBBER COVER V-22, TOGGLE SWITCH 64602

DRIVE MOTORS, FRONT WHEELS A46243

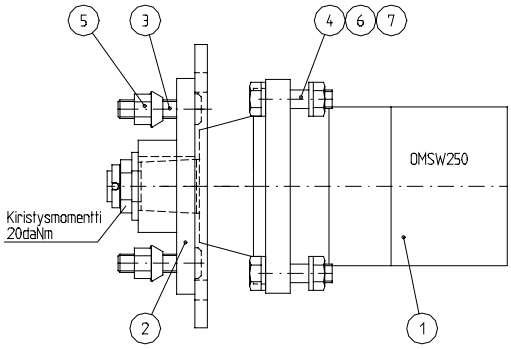

1	64540	1	HYDRAULIC MOTOR OMSW 250 151F0233
2	A46242	1	WHEEL HUB, FRONT, AVANT 200
3	74691	4	WHEEL BOLT 10.9 M12*1,5-60
4	72171	4	HEXAGONAL SCREW ZN M12* 45 DIN 931
5	73743	4	WHEEL NUT M12*1,5 DIN74361
6	72324	4	HEXAGONAL NUT M12 DIN 985 ZNNYLOC
7	73613	8	WASHER M12 A12 DIN 127 ZN JOUSI

DRIVE MOTORS, REAR WHEELS A46244

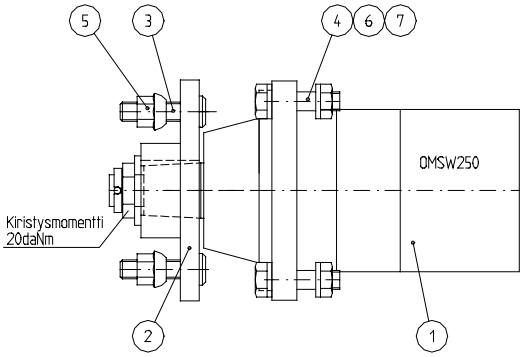

1	64540	1	HYDRAULIC MOTOR OMSW 250 151F0233
2	A43973	1	WHEEL HUB, OMS
3	74691	4	WHEEL BOLT 10.9 M12*1,5-60
4	72171	4	HEXAGONAL SCREW ZN M12* 45 DIN 931
5	73743	4	WHEEL NUT M12*1,5DIN74361
6	72324	4	HEXAGONAL NUT M12 DIN 985 ZNNYLOC
7	73613	8	WASHER M12 A12 DIN 127 ZN JOUSI

FUEL TANK A46411

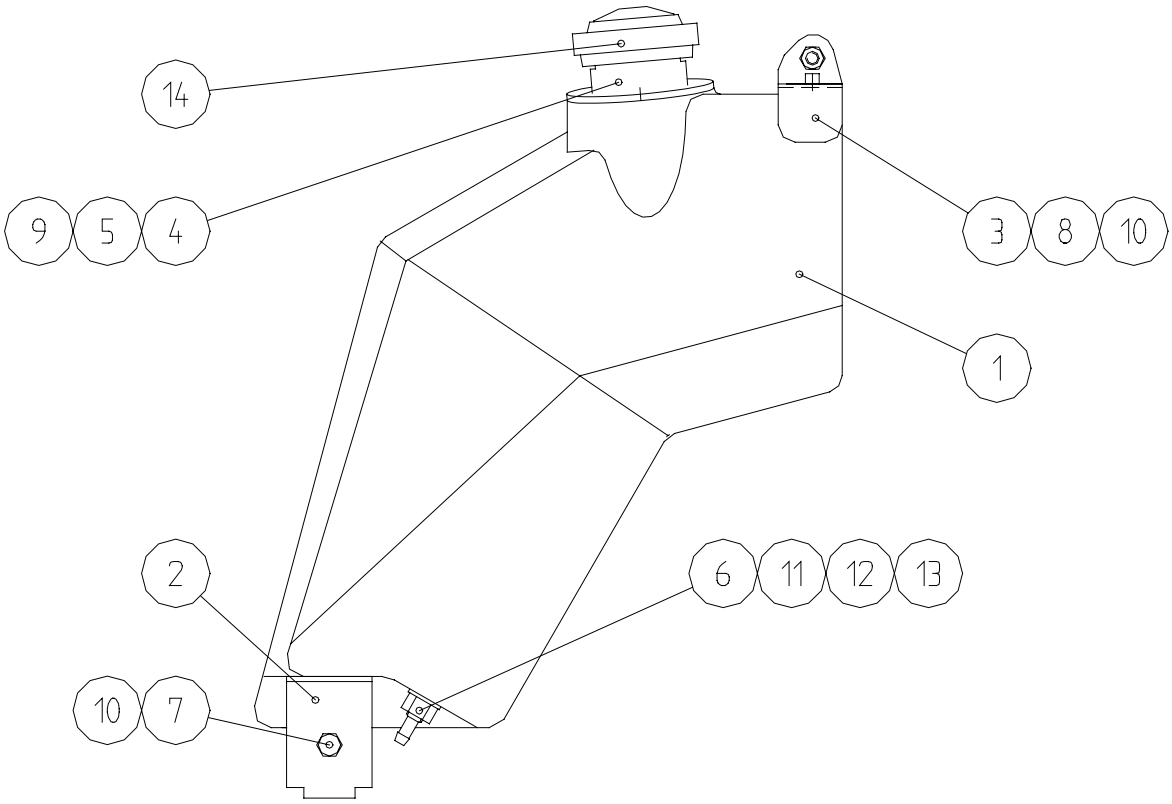

1	A33081	1	FUEL TANK 9L
2	A46284	1	BRACKET, BATTERY, LOWER
3	A46285	1	BRACKET, BATTERY, UPPER
4	A43133	1	BRACKET, FUEL TANK CAP
5	A46288	1	SEAL, FUEL TANK CAP
6	A43531	1	NIPPLE F7MM
7	72139	1	HEXAGONAL SCREW ZN M 8* 60 DIN 931
8	72130	1	HEXAGONAL SCREW ZN M 8* 20 DIN 933
10	72320	2	HEXAGONAL NUT ZN M8 DIN 985 NYLOC
11	72322	1	HEXAGONAL NUT M10 DIN 985 ZN
12	73121	1	WASHER M10 A10,5 DIN 125 ZN

SEAT A46502

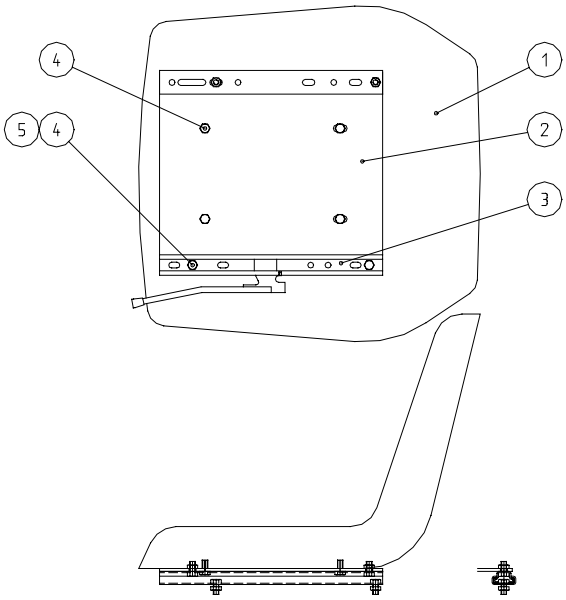

1	64106	1	SEAT PRAMA ART.205SC
2	A46421	1	SEAT BASE
3	64792	1	SEAT RAILS, SET COBO G5043.001
4	72128	12	HEXAGONAL SCREW ZN M 8* 12 DIN 933
5	72319	8	HEXAGONAL NUT ZN M 8 DIN 934 ZN

DAMPER ELEMENT A46549

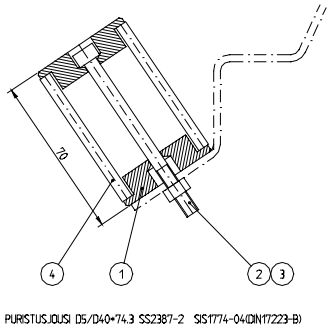

1	A46523	4	SPRING GUIDE
2	72127	2	HEXAGONAL SCREW ZN M6* 90 DIN 931
3	72318	2	HEXAGONAL NUT M6 DIN 985 ZNNYLOC
4		2	COMPRESSION SPRING 5*40*74.3 SS2387-2 SIS1774

DRIVE PEDAL, ASSEMBLY A33078

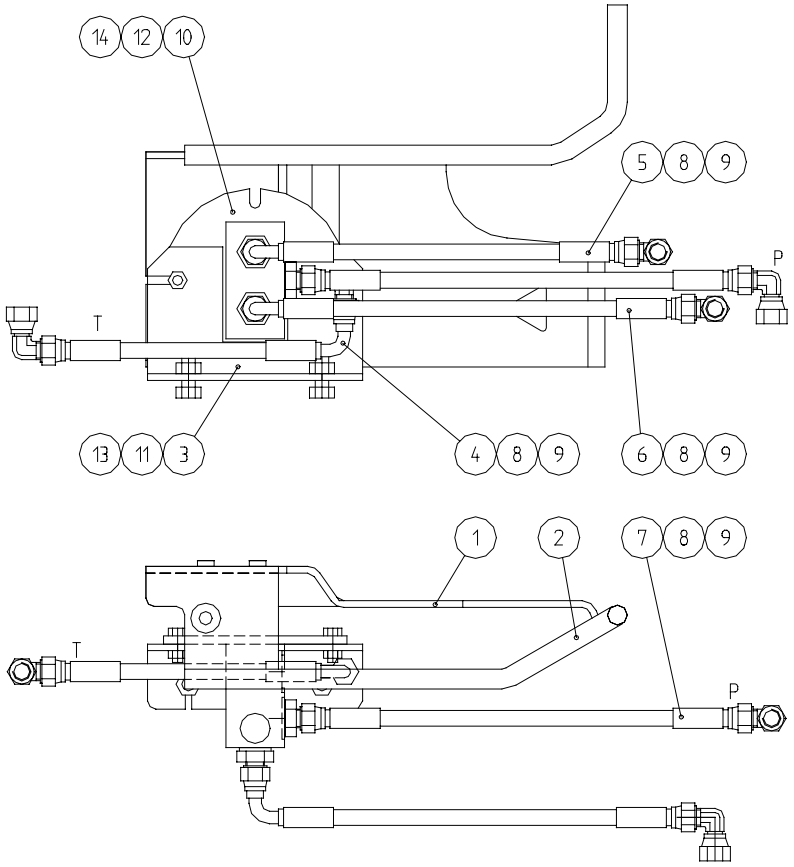

1	A45783	1	DRIVE PEDAL , RIGHT
2	A45785	1	DRIVE PEDAL , LEFT
3	A45662	1	BRACKET, DRIVE PEDAL
4	A46259	1	HYDRAULIC HOSE L=320 TY PE 087-3/16"
5	A46257	1	HYDRAULIC HOSE L=810 TY PE 087-3/16"
6	A46258	1	HYDRAULIC HOSE L=900 TYPE087-3/16"
7	A46260	1	HYDRAULIC HOSE L=900 TY PE 087-3/16"
8	64678	4	BASIC FITTING F40XS6-1/4"
9	64687	5	ELBOW FITTING 90° C40XS6-1/4"
10	64783	1	HYDR. PEDAL BONDIOLI HT2B001 S
11	72130	2	HEXAGONAL SCREW ZN M 8* 20 DIN 933
12	72117	2	HEXAGONAL SCREW ZN M 6* 16 DIN 933
13	72320	2	HEXAGONAL NUT ZN M8 DIN 985 NYLOC
14	72318	2	HEXAGONAL NUT M6 DIN 985 ZNNYLOC

HYDRAULIC HOSES, DRIVE A33077

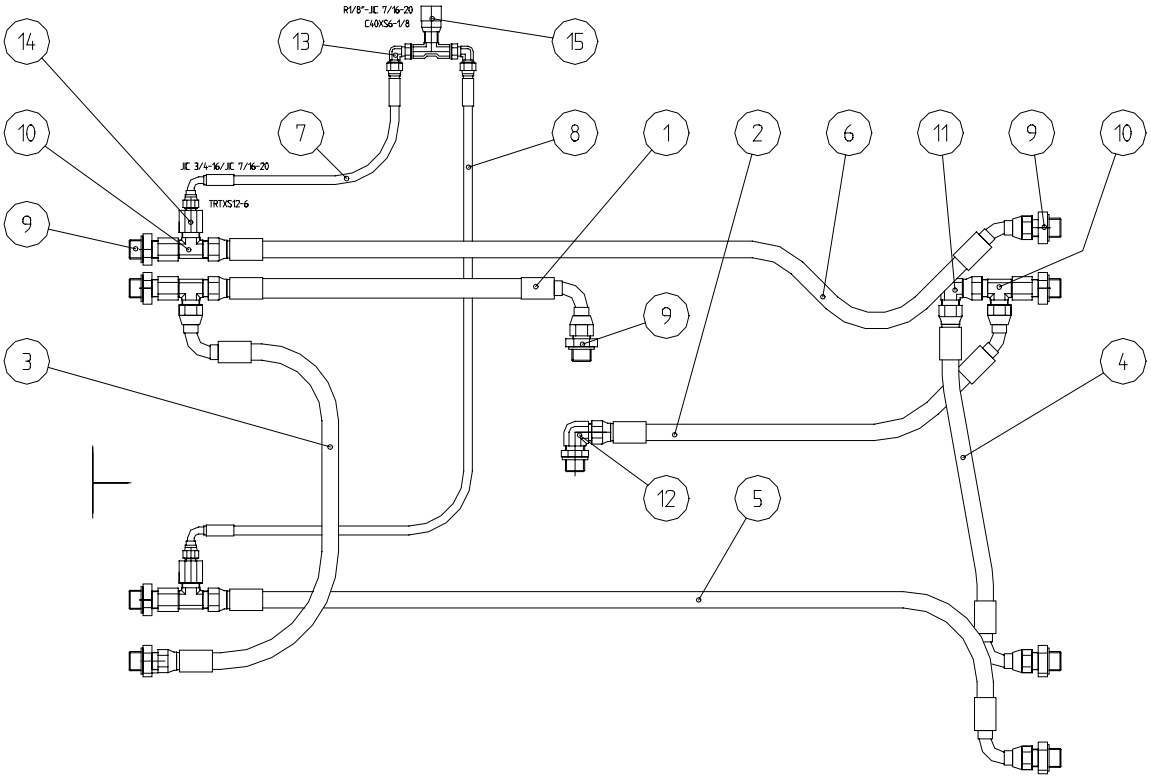

1	A46245	1	HYDRAULIC HOSE L=700 2LW-08 JIC12
2	A46246	1	HYDRAULIC HOSE L=1200 2LW-08 JIC12
3	A46247	1	HYDRAULIC HOSE L=570 2L W-06 JIC12
4	A46248	1	HYDRAULIC HOSE L=385 2L W-06 JIC12
5	A46249	1	HYDRAULIC HOSE L=2580 2LW-06 JIC12
6	A46250	1	HYDRAULIC HOSE L=2120 2LW-06 JIC12
7	A46251	1	HYDRAULIC HOSE L=900 TYPE 087-3/16"
8	A46252	1	HYDRAULIC HOSE L=1300 TYPE 087-3/16"
9	64058	9	BASIC FITTING F40XS12-1/2
10	64050	4	L FITTING BODY R6XS12
11	64134	1	ELBOW FITTING 90° C6XS12
12	64045	1	ELBOW FITTING 90° C40XS12-1/2
13	64798	2	ELBOW FITTING 90° C40XS6-1/8"
14	64711	2	REDUCER FITTING TRTXS12-6
15	64797	1	RESTRICTOR VALVE 9N200S R1/8"

HYDRAULIC HOSES, OPEN CIRCUIT/COOLER A21132

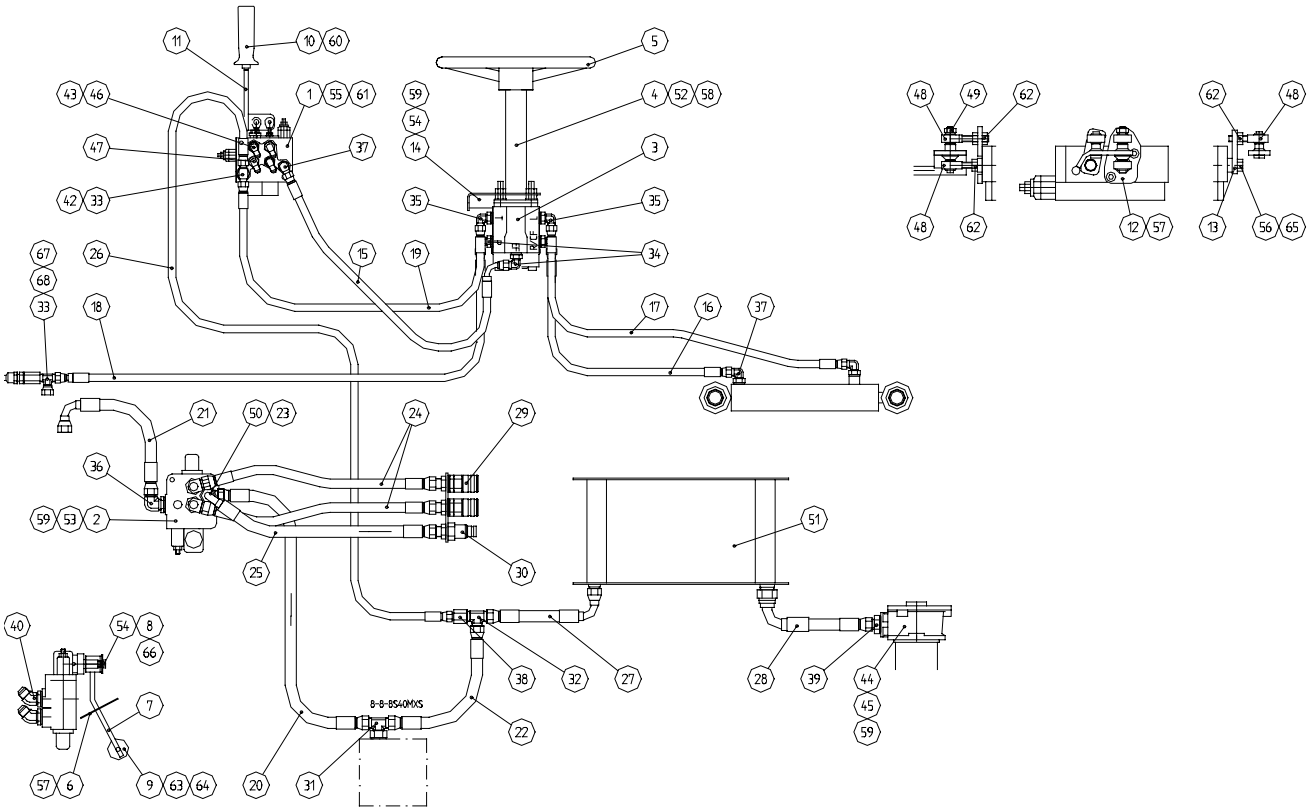

1	64795	1	CONTROL VALVE BLB FM35/2 A-B=1/4GK(180
2	64770	1	CONTROL VALVE SD5/1-P(KG3-120)/18L/AET
3	64178	1	CONTROL BLOCK M+S HKUS 80/5-140
4	64780	1	STEERING WHEEL ROD M+S KK600 - I
5	64787	1	STEERING WHEEL COBO F320 + KNOB
6	A46150	1	STOPPER
7	A46276	1	LEVER
8	A46277	1	BUSHING
10	A44435	1	HANDLE
11	A46432	1	LEVER, ASSEMBLY
12	A46427	1	MANIFOLD PLATE
13	A46428	1	LEVER
14	A45116	1	BRACKET, CONTROL BLOCK M+S
15	A46261	1	HYDRAULIC HOSE L=1130 1LW-04 JIC10
16	A46262	1	HYDRAULIC HOSE L=510 1L W-04 JIC10
17	A46263	1	HYDRAULIC HOSE L=780 1LW-04 JIC10
18	A46264	1	HYDRAULIC HOSE L=1160 1LW-04 JIC10
19	A46265	1	HYDRAULIC HOSE L=1260 1LW-04 JIC10
20	A46266	1	HYDRAULIC HOSE L=1170 1LW-06 JIC12

21	A46268	1	HYDRAULIC HOSE L=1250 2LW-06 JIC12
22	A46269	1	HYDRAULIC HOSE L=275 1LW-08 JIC12
23	64050	1	L FITTING BODY R6XS12
24	A46271	2	HYDRAULIC HOSE L=1450 2 LW-06 JIC12
25	A46272	1	HYDRAULIC HOSE L=1450 1LW-06 JIC12
26	A46273	1	HYDRAULIC HOSE L=325 1LW-04 JIC10
27	A46267	1	HYDRAULIC HOSE L=350 1LW-08 JIC12
28	A46274	1	HYDRAULIC HOSE L=1220 1LW-08 JIC12
29	64566	2	QUICK COUPLER FEMALE FLAT 1/2" FA9 1/2
30	64565	1	QUICK COUPLER MALE FLAT 1/2" MA9 1/2
31	64771	1	T FITTING BODY S40XS12-1/2
32	64200	1	T FITTING JTXS12
33	64070	2	T THREADED FITTING BODY S6XS10
34	64166	2	ELBOW FITTING 90° C40XS10-1/2"
35	64044	3	ELBOW FITTING 90° C40XS10-3/8
36	64068	1	ELBOW FITTING 90° C40XS12-3/8
37	64087	3	ELBOW FITTING 90° C40XS10-1/4"
38	64051	1	REDUCER FITTING TRTXS12-10
39	64058	1	BASIC FITTING F40XS12-1/2
40	64791	2	KULMALIITIN 45° V40XS12-3/8
41	64041	2	BASIC FITTING F40XS10-3/8
42	64059	1	BASIC FITTING F40XS10-1/4
43	64678	2	BASIC FITTING F40XS6-1/4"
44	73750	1	HYDR. OIL FILTER, RETURN OMTF65-20
45	74093	1	FILTER CARTRIDGE MF100 F5-6/P20
46	64308	2	ELBOW FITTING 90° C6XS6
47	64687	2	ELBOW FITTING 90° C40XS6-1/4"
48	63690	3	ROD END BEARING ASAHI JAM 6
49	A41822	1	NUT M6
50	64042	1	BASIC FITTING F40XS12-3/8
51	64546	1	ÖIL COOLER CELL 925AN12-AN8
52	74587	4	STUD BOLT M10* 35 DIN 939-5.8
53	74503	3	HEXAGONAL SCREW ZN M 8* 65 DIN 931
54	72130	3	HEXAGONAL SCREW ZN M 8* 20 DIN 933
55	74516	3	HEXAGONAL SCREW ZN M 6* 50 DIN 933
56	72117	1	HEXAGONAL SCREW ZN M 6* 16 DIN 933
57	72110	4	HEXAGONAL SCREW ZN M 5* 16 DIN 933
58	72321	8	HEXAGONAL NUT ZN M 10 DIN 934
59	72320	7	HEXAGONAL NUT ZN M8 DIN 985 NYLOC
60	72319	1	HEXAGONAL NUT ZN M8 DIN 934 ZN
61	72318	3	HEXAGONAL NUT M6 DIN 985 ZNNYLOC
62	72317	4	HEXAGONAL NUT M6 DIN 934 ZN
63	72322	1	HEXAGONAL NUT M10 DIN 985 ZN
64	73018	1	WASHER M10 R11 DIN 440 ZN KORI
65	74452	1	WASHER M 6 A6 DIN 127 ZN JOUSI
66	73962	1	WASHER M 8 A8 DIN 127 ZN JOUSI
67	64195	1	TEST FITTING TT4XS10-1/4"
68	64196	1	MANOMETER FITTING M16*2<=>R1/4"OUTTHR